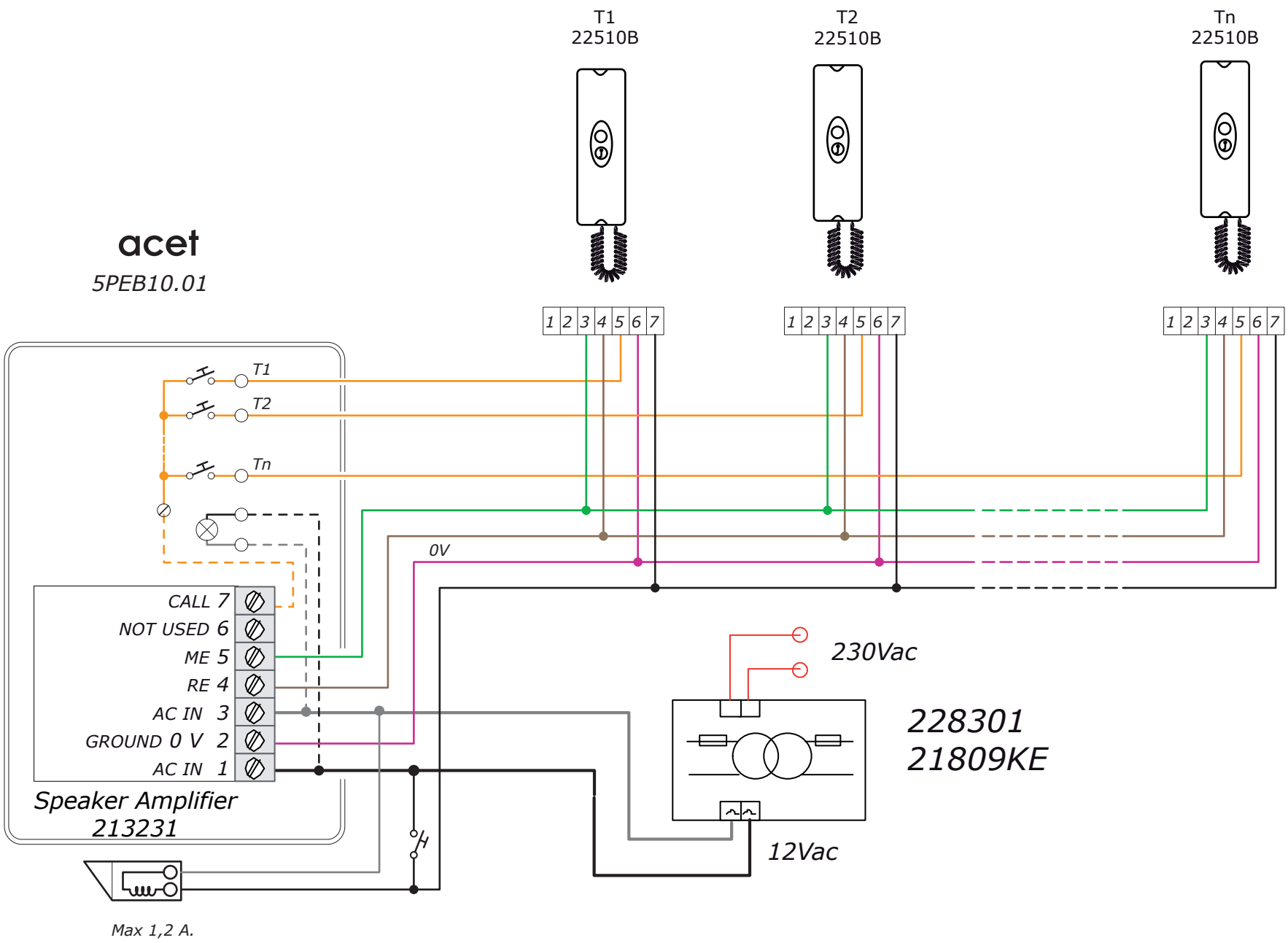
T1
22510B
T2
22510B
Tn
22510B
acet
5PEB10.01
1 2 3 4 5 6 7
1 2 3 4 5 6 7
1 2 3 4 5 6 7
T1
T2
Tn
0V
CALL 7
NOT USED 6
ME 5
RE 4
AC IN 3
GROUND 0 V 2
AC IN 1
Speaker Amplifier
213231
230Vac
228301
21809KE
12Vac
Max 1,2 A.